Installation & Operation
Sanitary Breakaway Coupling

Product: SBC-E-Series

The Right Connection®

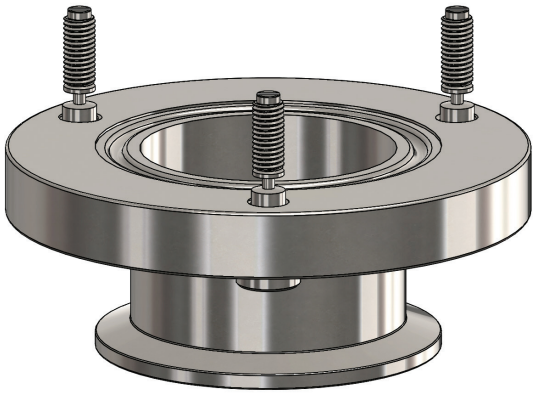

1. Thread in breakaway bolts, hand tight in body

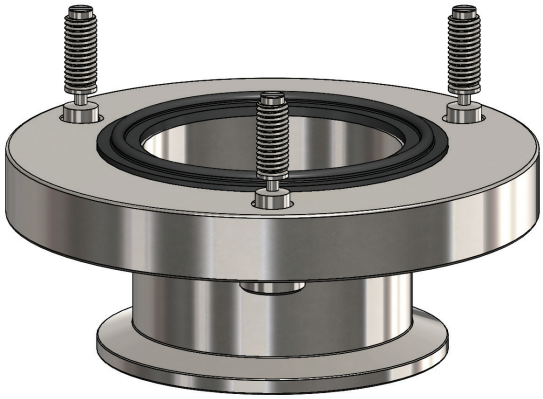

2. Place gasket on body

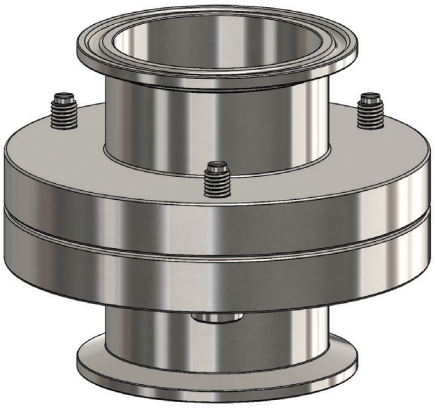

3. Place second body over bolts

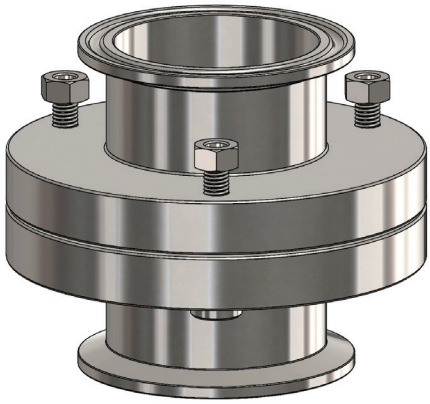

4. Start nuts on bolts

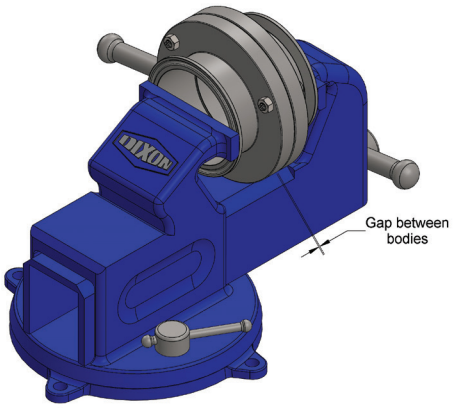

5. Compress bodies together in vise to evenly reduce gap to 0.032 in (check with feeler gauge)
6. Apply threadlocker to bolts and hand tighten nuts

Dixon Sanitary
N25 W23040 Paul Road • Pewaukee, WI 53072
ph: 800.789.1718 • fx: 800.789.4046
dixonvalve.com

© 2022 DVCC • DSSBCE-IOM_622